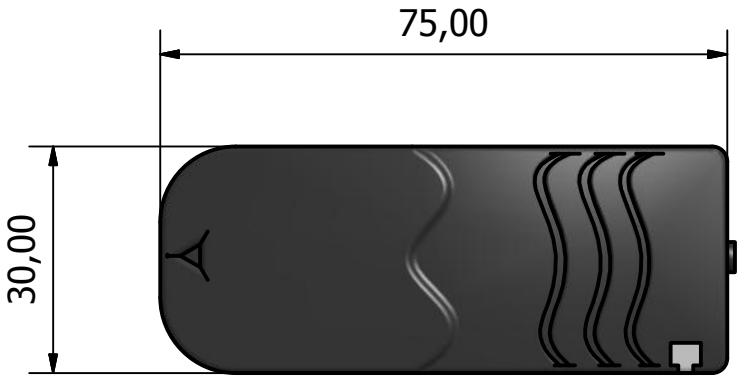

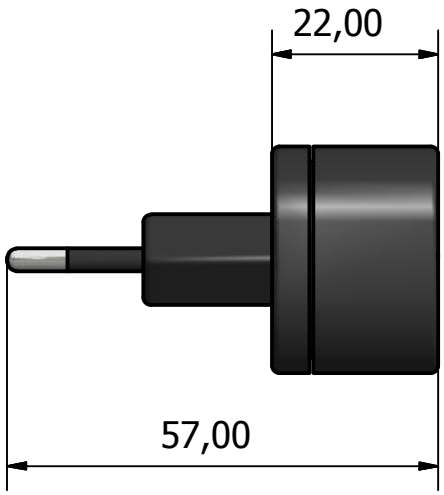

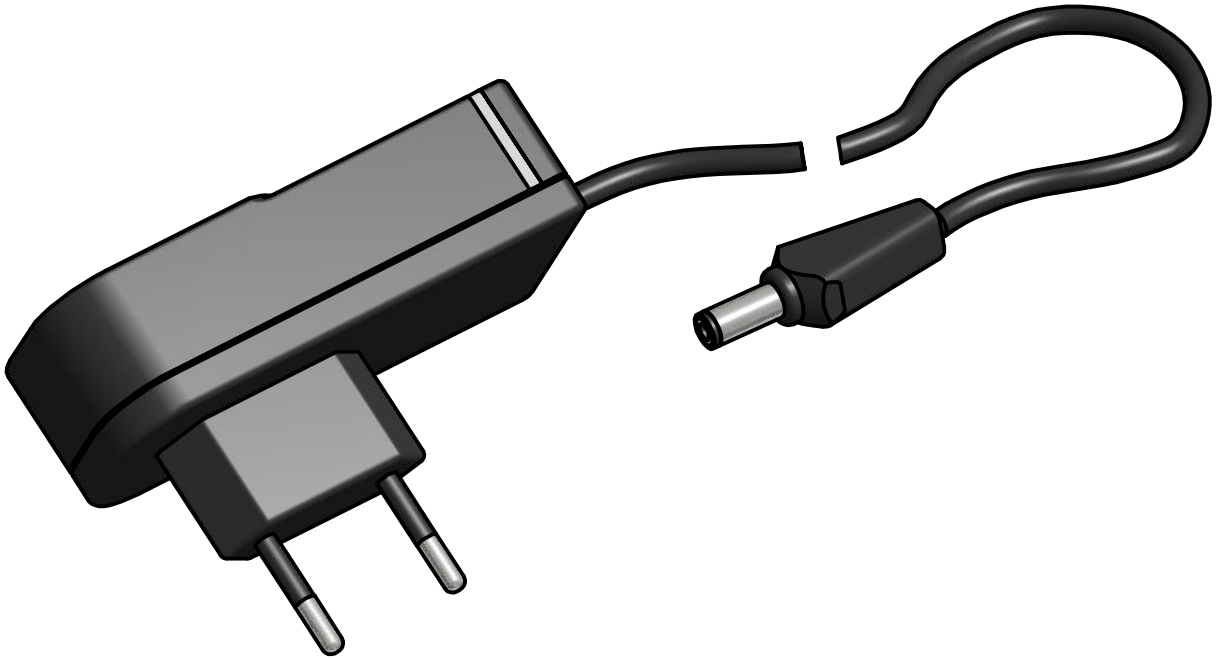

Name: PL-2280/12	Code: 09_2280_00

A II class EMI shield (CEE 7/16) power supply connectible to a socket-outlet. A suitable power supply for laser units with DC-connector.

Input voltage: 100-240 VAC
Output voltage: 12 VDC
Power: 6W
Cable: 1,5m
Material: Plastic
Weight: 85g

Scale 1:1	Dimensions in millimeters
Size A4	
REV A	
Date 19.2.2016	

KEYPOINT