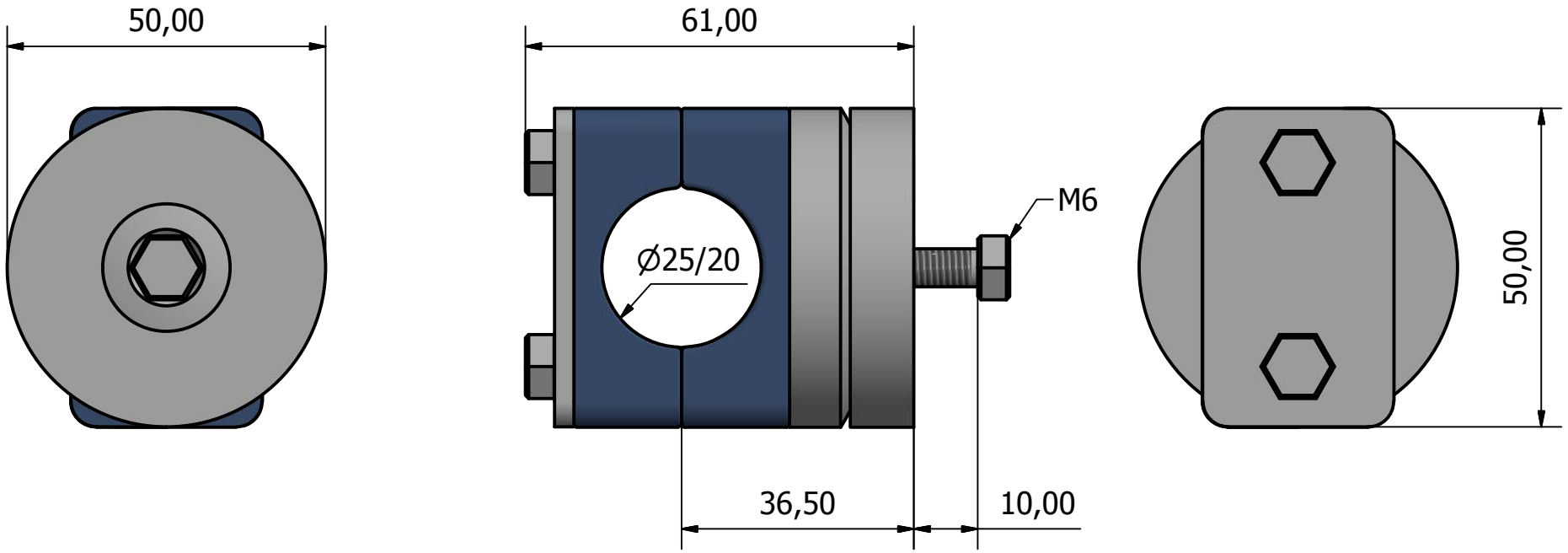

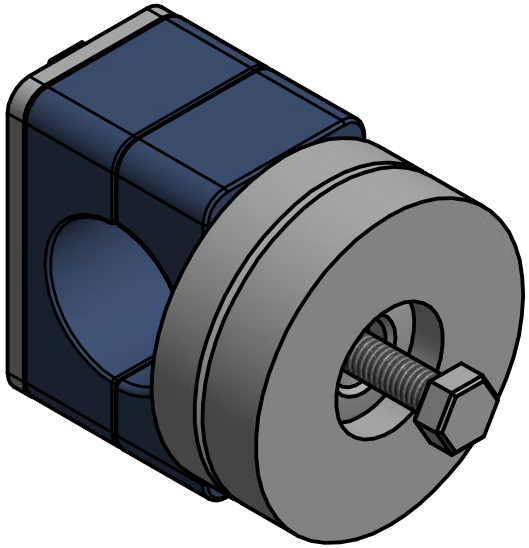

Nimi: Bracket & joint	Koodi: 09_0002_00

A mounting bracket/joint suitable for mounting and aiming laser units.
Available for 20mm & 25mm pipes.
Joint tilt ± 15°

Material: polypropen, steel, anodized aluminium
Weight: 180g

Scale 1:1	Dimensions in millimeters
Size A4	
REV A	
Date 19.2.2016	

KEYPOINT