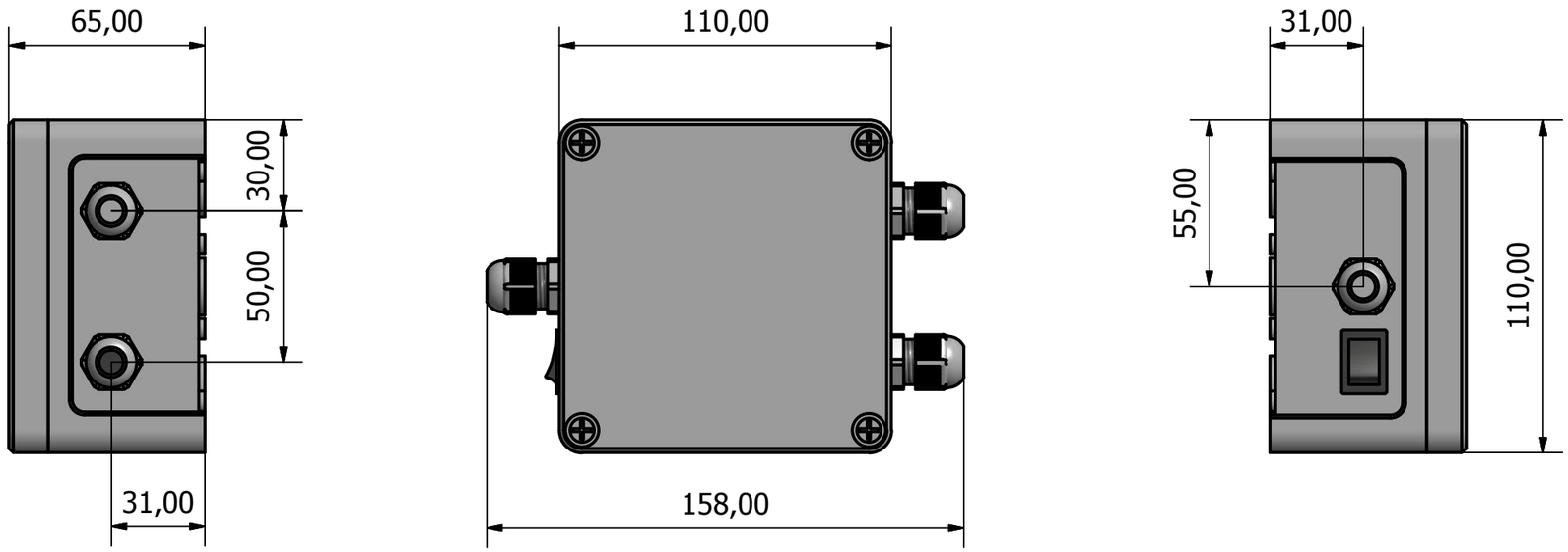

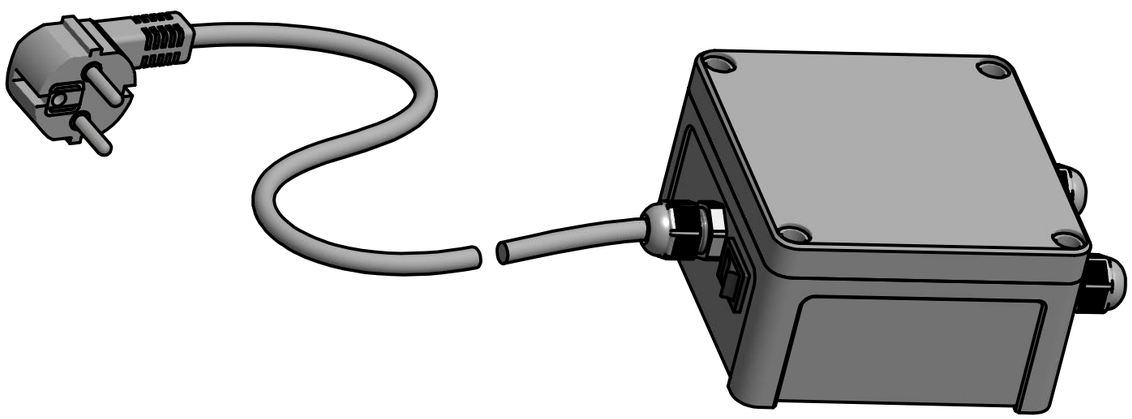

Name: PS-3001/XX	Code: 09_3001_XX

A II class EMI shield (CEE 7/7) power supply connectible to a socket-outlet. An external power switch. Screw fasteners for the electrical wires. Plastic glands with strain relief.

Input voltage: 230VAC
Output voltage (options):
5VDC, 8VDC, 12VDC, 16VDC or 24VDC
Power: 12W
Cable: 2m
Material: ABS plastic, polyamide
Casing: FIBOX TEMPO TA 111107
IP rating: IP62
Weight: 700g

Scale 1:2	Dimensions in millimeters
Size A3	KEYPOINT
REV A	
Date 19.2.2016	